P100001621
EVAL_3K3W_ARCP_PSU
ASSEMBLY INSTRUCTIONS

INDEX

- P2 – assembly of electronic modules
- P3 – assembly of mechanical components

					Datum	Name
				Gezeich	07.04.2026	Wernegger
				Kontroll		
				Norm		
Status	Änderungen	Datum	Name			

EVAL_3K3W_ARCP_PSU | 1 | A2

PARTS LIST			
ITEM	QTY	PART #	DESIGNATOR
1	2	MG100003070/ ICE8024.3002.052	L1+L2
2	1	CD100001621	X3+X6
3	1	PW200003075	X2
4	1	MG4000003070	L3
5	1	MG100001621	L4
6	1	MG200003070/ ICE8024.3002.053	L6
7	1	MG600003070/ ICE8052.1102.052	TR1
8	1	M100001621	
9	1	TF100001621	T1
10	1	PW100001621	X7
11	1	EL100001621	X8

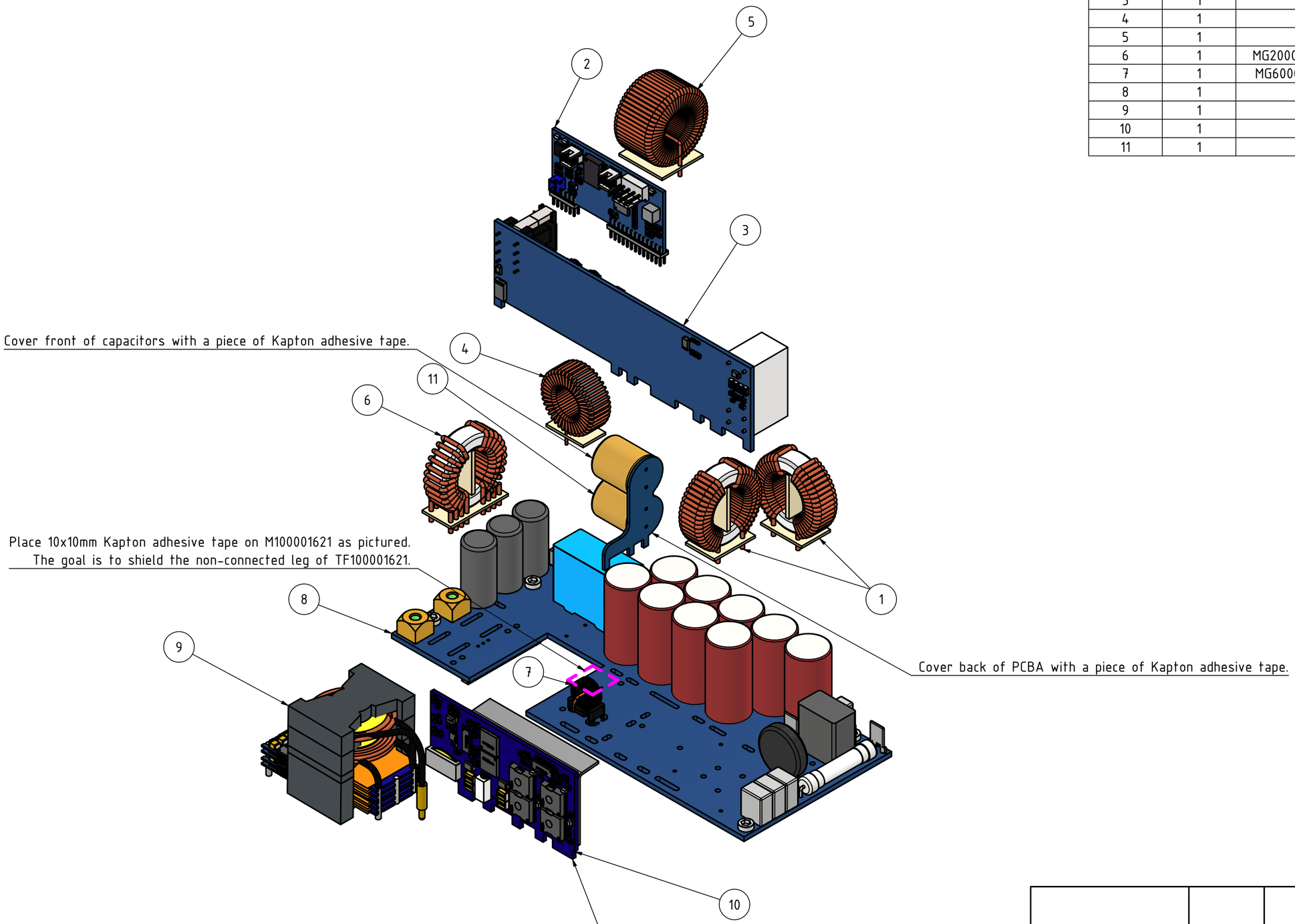

Cover front of capacitors with a piece of Kapton adhesive tape.

Place 10x10mm Kapton adhesive tape on M100001621 as pictured.
The goal is to shield the non-connected leg of TF100001621.

Cover back of PCBA with a piece of Kapton adhesive tape.

Assemble before soldering to main board!
See sub-assembly instructions for PW100001621

					Datum	Name
				Gezeich	07.04.2026	Wernegger
				Kontroll		
				Norm		
Status	Änderungen	Datum	Name			

EVAL_3K3W_ARCP_PSU 2
A2

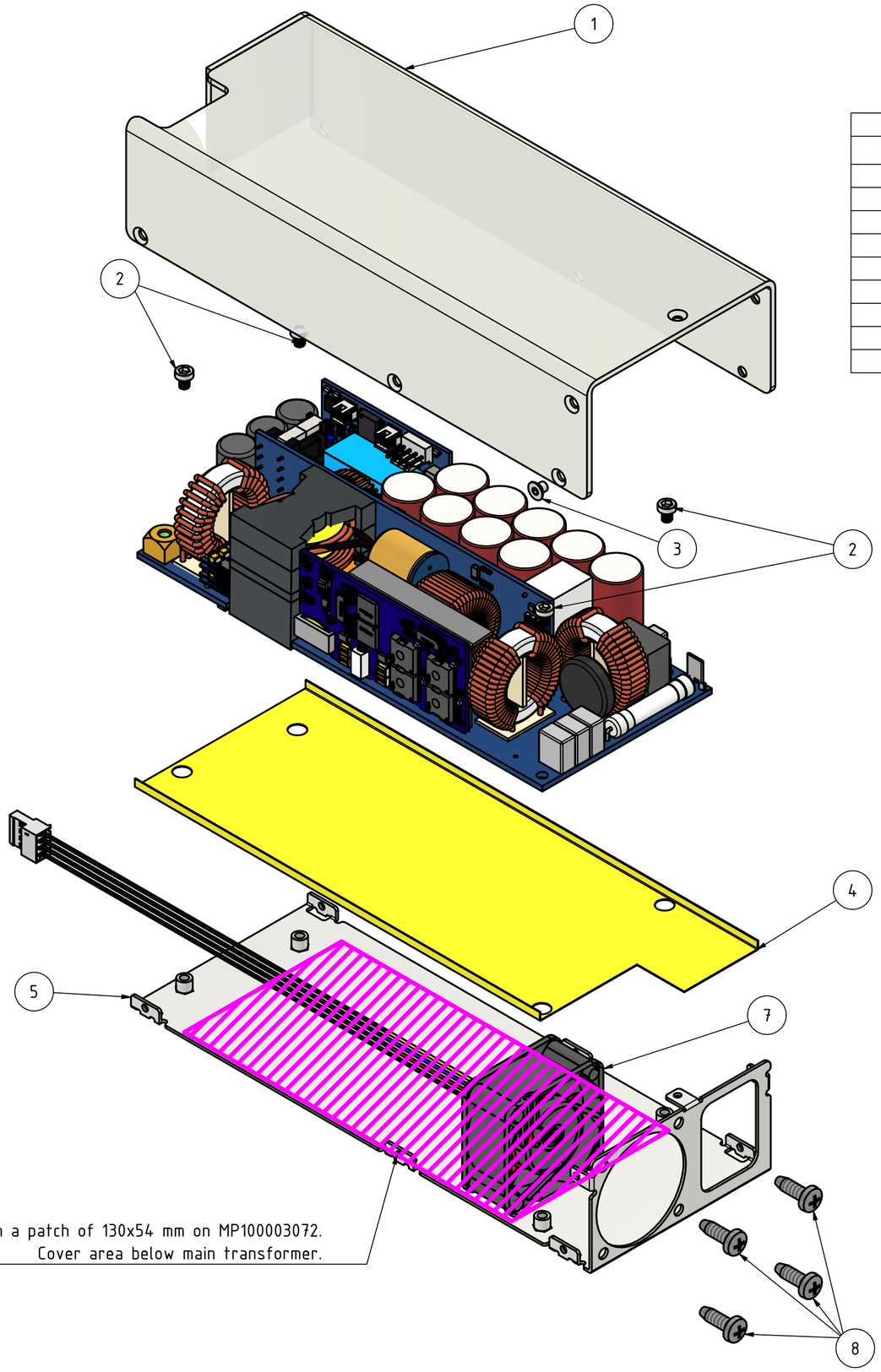

PARTS LIST			
ITEM	QTY	PART #	COMMENT
1	1	HO100003073	
2	4	M3 x 5 Hex head	
3	7	M3x4 countersunk head	pictured only once
4	1	IS100003070	
5	1	MP100003072	
6	1	IEC AC Connector 100003071	
7	1	FA100003070	
8	1	Self-tapping screws UTS 8-1/2	RS Components 546-5705
9	1		

Place Copper adhesive tape in a patch of 130x54 mm on MP100003072.
Cover area below main transformer.

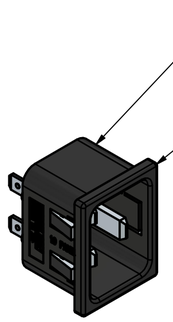

See assembly drawing for IEC AC 100003070 before installation!

					Datum	Name
				Gezeich	07.04.2026	Wernegger
				Kontroll		
				Norm		
Status	Änderungen	Datum	Name			

EVAL_3K3W_ARCP_PSU 3
A2